1. General Description

A: COMPONENT

1. FRONT EXHAUST PIPE

- Except for STI model

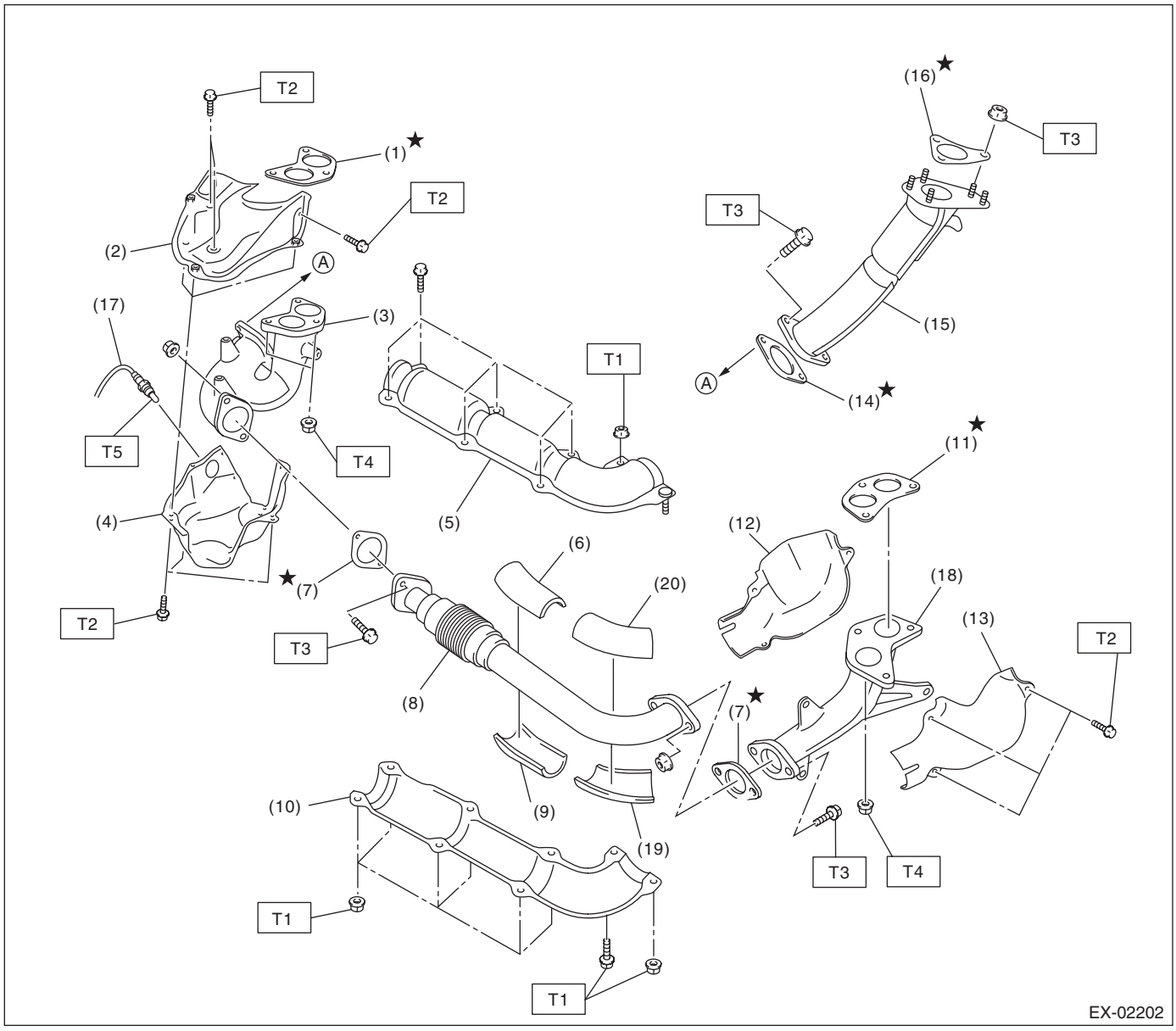

(1) Gasket
(2) Exhaust manifold upper cover (RH)
(3) Exhaust manifold (RH)
(4) Exhaust manifold lower cover (RH)
(5) Front exhaust pipe upper cover
(6) Front exhaust pipe upper insulator (RH)
(7) Gasket
(8) Front exhaust pipe
(9) Front exhaust pipe lower insulator (RH)
(10) Front exhaust pipe lower cover
(11) Gasket
(12) Exhaust manifold inner cover (LH)
(13) Exhaust manifold outer cover (LH)
(14) Gasket
(15) Turbocharger joint pipe
(16) Gasket
(17) Front oxygen (A/F) sensor
(18) Exhaust manifold (LH)
(19) Front exhaust pipe lower insulator (LH)
(20) Front exhaust pipe upper insulator (LH)

Tightening torque:N·m (kgf-m, ft-lb)

T1: 7.5 (0.8, 5.5)
T2: 19 (1.9, 14.0)
T3: 35 (3.6, 26)
T4: 40 (4, 28.9)
T5: <Ref. to FU(H4DOTC)-46, INSTALLATION, Front Oxygen (A/F) Sensor.>

- STI model

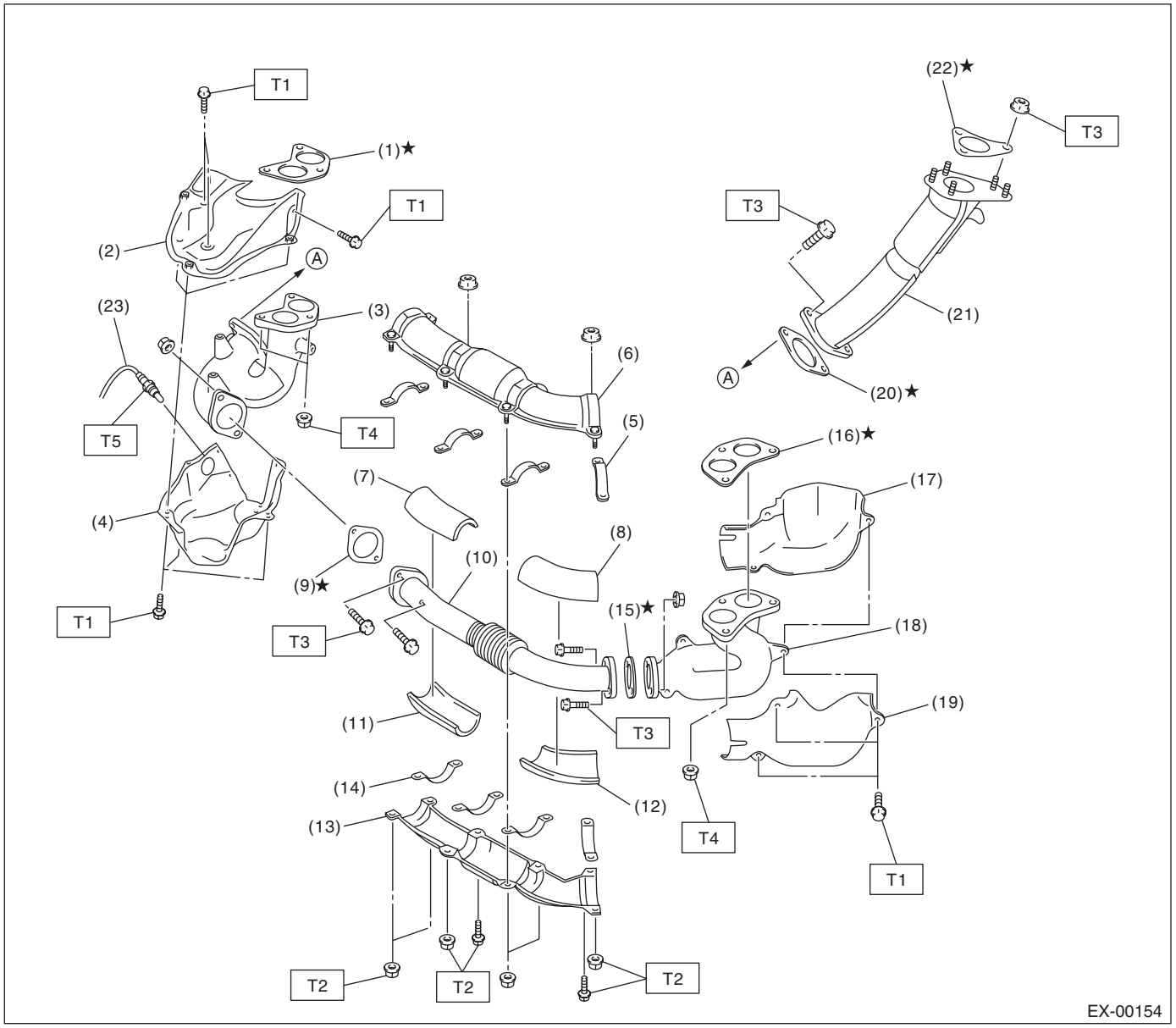

(1) Gasket
(2) Exhaust manifold upper cover (RH)
(3) Exhaust manifold (RH)
(4) Exhaust manifold lower cover (RH)
(5) Front exhaust pipe upper clamp
(6) Front exhaust pipe upper cover
(7) Front exhaust pipe upper insulator (RH)
(8) Front exhaust pipe upper insulator (LH)
(9) Gasket
(10) Front exhaust pipe
(11) Front exhaust pipe lower insulator (RH)
(12) Front exhaust pipe lower insulator (LH)
(13) Front exhaust pipe lower cover
(14) Front exhaust pipe lower clamp
(15) Gasket
(16) Gasket
(17) Exhaust manifold inner cover (LH)
(18) Exhaust manifold (LH)
(19) Exhaust manifold outer cover (LH)
(20) Gasket
(21) Turbocharger joint pipe
(22) Gasket
(23) Front oxygen (A/F) sensor

Tightening torque:N·m (kgf-m, ft-lb)

T1: 19 (1.9, 14.0)
T2: 25 (2.5, 18.1)
T3: 35 (3.6, 26)
T4: 40 (4, 28.9)
T5: <Ref. to FU(H4DOTC)-46, INSTALLATION, Front Oxygen (A/F) Sensor.>

2. CENTER AND REAR EXHAUST PIPE, AND MUFFLER

- Except for STI model

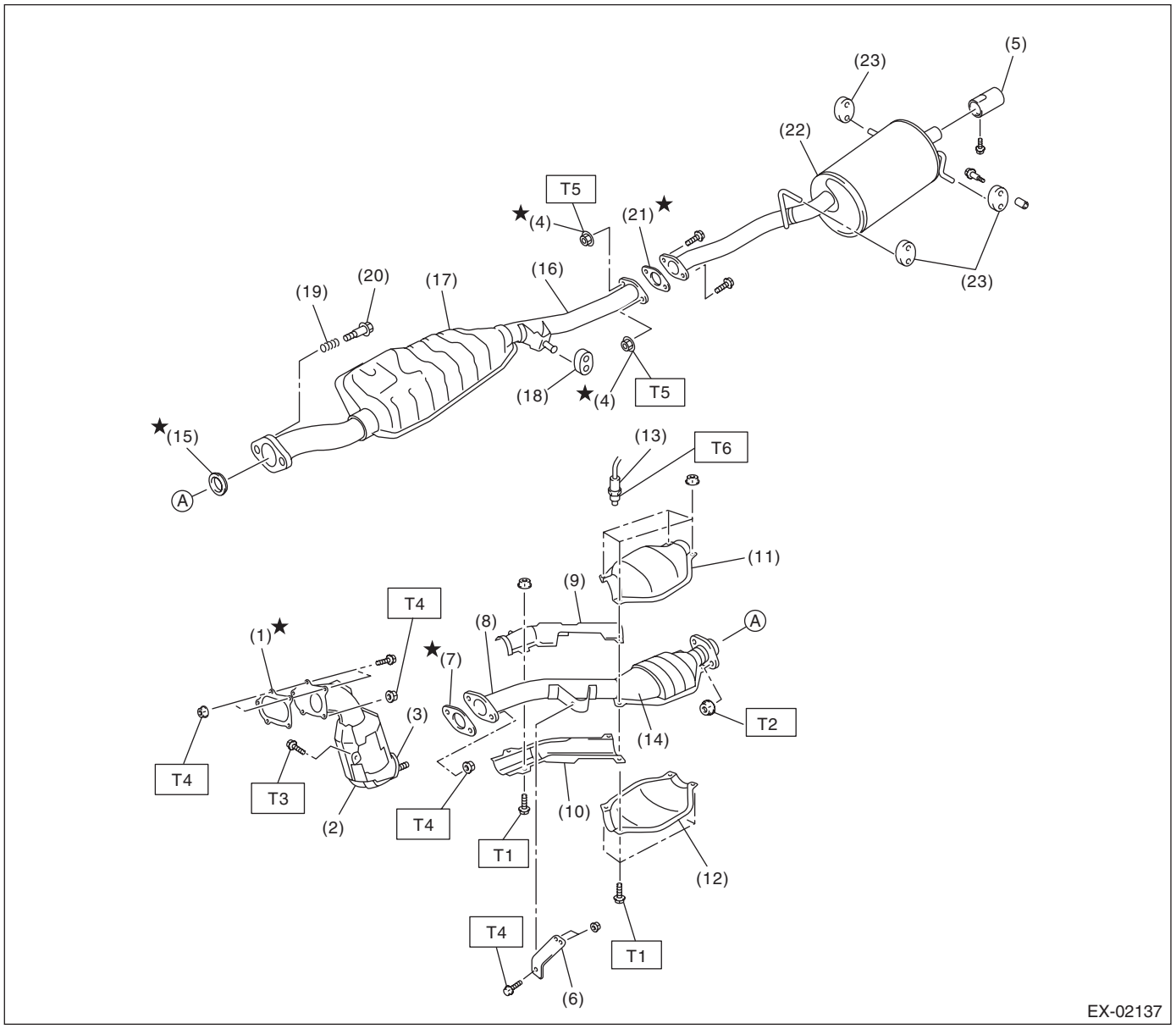

(1) Gasket
(2) Front catalytic converter
(3) Center exhaust pipe (Front)
(4) Self-locking nut
(5) Muffler cutter
(6) Bracket
(7) Gasket
(8) Center exhaust pipe (Rear)
(9) Center pipe upper cover (Rear)
(10) Center pipe lower cover (Rear)
(11) Rear catalytic converter upper cover
(12) Rear catalytic converter lower cover
(13) Rear oxygen sensor
(14) Rear catalytic converter
(15) Gasket
(16) Rear exhaust pipe
(17) Chamber
(18) Cushion rubber
(19) Spring
(20) Bolt
(21) Gasket
(22) Muffler
(23) Cushion rubber

Tightening torque:N·m (kgf-m, ft-lb)

T1: 13 (1.3, 9.6)
T2: 18 (1.8, 13)
T3: 30 (3.1, 22.4)
T4: 35 (3.6, 26)
T5: 48 (4.9, 35.4)
T6: <Ref. to FU(H4DOTC)-48, INSTALLATION, Rear Oxygen Sensor.>

- STI model

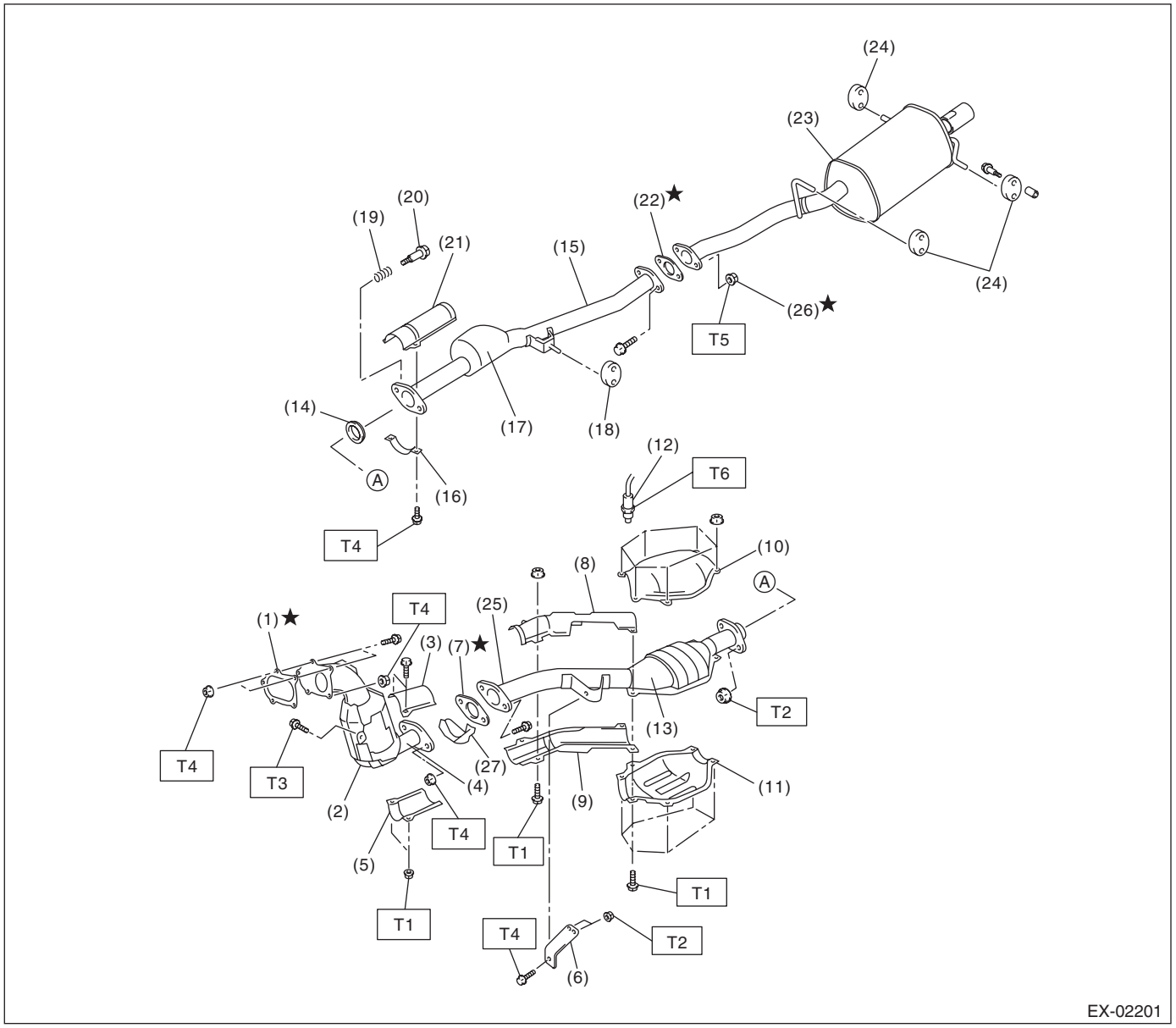

(1)	Gasket	(13)	Rear catalytic converter	(25)	Center exhaust pipe (Rear)
(2)	Front catalytic converter	(14)	Gasket	(26)	Self-locking nut
(3)	Center pipe upper cover (Front)	(15)	Rear exhaust pipe	(27)	Flange cover
(4)	Center exhaust pipe (Front)	(16)	Clamp		
(5)	Center pipe lower cover (Front)	(17)	Chamber		
(6)	Bracket	(18)	Cushion rubber		
(7)	Gasket	(19)	Spring		
(8)	Center pipe upper cover (Rear)	(20)	Bolt		
(9)	Center pipe lower cover (Rear)	(21)	Rear exhaust pipe upper cover (Front)		
(10)	Rear catalytic converter upper cover	(22)	Gasket		
(11)	Rear catalytic converter lower cover	(23)	Muffler		
(12)	Rear oxygen sensor	(24)	Cushion rubber		

Tightening torque:N·m (kgf-m, ft-lb)

T1: 13 (1.3, 9.6)
T2: 18 (1.8, 13)
T3: 30 (3.1, 22.4)
T4: 35 (3.6, 26)
T5: 48 (4.9, 35.4)
T6: <Ref. to FU(H4DOTC)-48, INSTALLATION, Rear Oxygen Sensor.>

B: CAUTION

- Wear appropriate work clothing, including a cap, protective goggles and protective shoes when performing any work.
- Remove contamination including dirt and corrosion before removal, installation or disassembly.
- Keep the disassembled parts in order and protect them from dust and dirt.
- Before removal, installation or disassembly, be sure to clarify the failure. Avoid unnecessary removal, installation, disassembly and replacement.
- Vehicle components are extremely hot after driving. Be wary of receiving burns from heated parts.
- Be sure to tighten fasteners including bolts and nuts to the specified torque.
- Place shop jacks or rigid racks at the specified points.
- Before disconnecting connectors of sensors or units, be sure to disconnect the ground cable from the battery.
- If any fat adheres to the exhaust pipe, wipe it off. Otherwise a fire may happen.